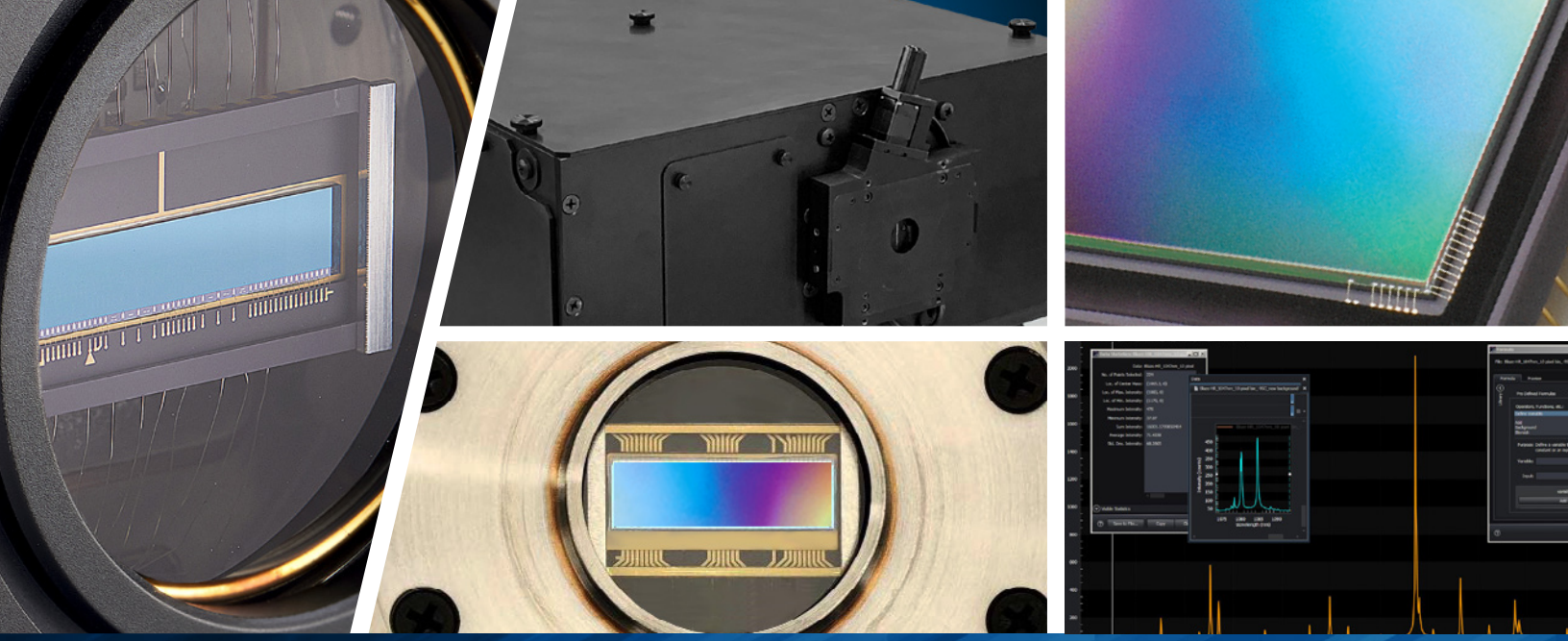

Cameras Engineered for OEM Quality Performance and Manufacturability

Data Sheet 2022

LANSIS™ 261 CCD Cameras

A POWERFUL NEW ADDITION TO TELEDYNE'S SPECTROSCOPY SYSTEMS FOR SYSTEM INTEGRATORS AND OEMS

TELEDYNE

Princeton Instruments
Scientific Imaging

CCD Array Detection Systems for Spectroscopic Applications for Increased Productivity and Reliability

» Raman
» Optical Emission Spectroscopy (OES)
» Fluorescence
» Photoluminescence (PL)

The new LANSIS 261 spectroscopy CCD cameras are truly the culmination of high reliability, performance, and cost, to meet virtually any performance and budget requirements.

LANSIS 261 Spectroscopy CCD

» 30.72 x 3.96 mm sensor
» 2048 x 263 pixels
» 15 x 15 µm pixel size
» Back-Illuminated, deep-depletion design

KEY FEATURES

Highest Reliability
» Worry-free, permanent vacuum-seal technology
» High performance back-illuminated CCD with exclusive Teledyne's eXcelon® technology

Highest Sensitivity
» Highest average quantum efficiency (QE) from UV to NIR

Easiest System Integration
» True plug-n-play convenience
» Teledyne's ultimate software development kit,(SDK), provides complete control of camera operations
» Easy, seamless integration to your system
» Python, C++, LabVIEW compatibility
» Full optical, mechanical, and software support
» PICam™ API drivers automate descriptions of functions, parameters, and valued used to create a user-designed interface for LANSIS cameras and accessories

EXPORT CONTROLS

The LANSIS camera is designed and built in the United States. It ships in compliance with U.S. Export Administration Regulation EAR99.

▲ LANSIS 261 camera shown with OEM spectrograph (OEM 320)

Teledyne's Vision Solutions Group: Strength in Design and Manufacturing for System Integrators and OEMs

We offer best-in-class sensors, cameras, spectrometers, optical coatings, and software integration technologies. And, with strict Operational Excellence manufacturing, you're assured consistent, uniform results in high volumes.

We understand that to maintain a competitive edge, you must deliver the highest-quality equipment in the most cost-effective way possible. And for more than forty years, Princeton Instruments, Photometrics, and Acton Optics & Coatings have helped customers do just that. Now, combined through acquisition by Teledyne our *Vision Solutions Group* offers a single-source solution to OEMs and integrators to maintain quality, reduce costs, and extend the service life of components.

By combining Teledyne's in-house advanced CCD design, along with global R&D resources, we empower improved productivity, ultimately providing better products.

Advantages of CCD Detectors

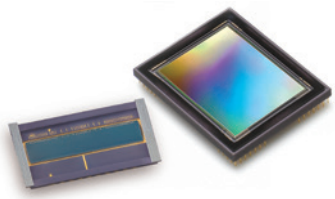

CCDs typically offer lower dark current, allowing for increased exposure times. This is crucial for detection of low signal levels.

CCDs feature the unique ability to bin or sum the intensities of multiple pixel rows for increased detection capability. This is available as a real-time, on-chip function or as a post-processing feature.

Spectroscopy formats – the ideal spectroscopy-formatted sensor is typically rectangular for increased wavelength coverage and higher spectral resolution. Sensors are designed to be wider in the horizontal direction to match the wavelength dispersion of a spectrograph.

▶ **OEM systems with high UV sensitivity requirements should choose Unichrome for their LANSIS detection systems**

Optional CCD Performance-Enhancing Processes

eXcelon® technology is Teledyne's patented CCD-enhancement process that provides dramatically improved quantum efficiency (QE) across a wavelength range of 350 to 1100 nm, with the best near-infrared (NIR) etalon-suppression technology available. The traces (below) show the dramatic improvement in QE provided by eXcelon technology.

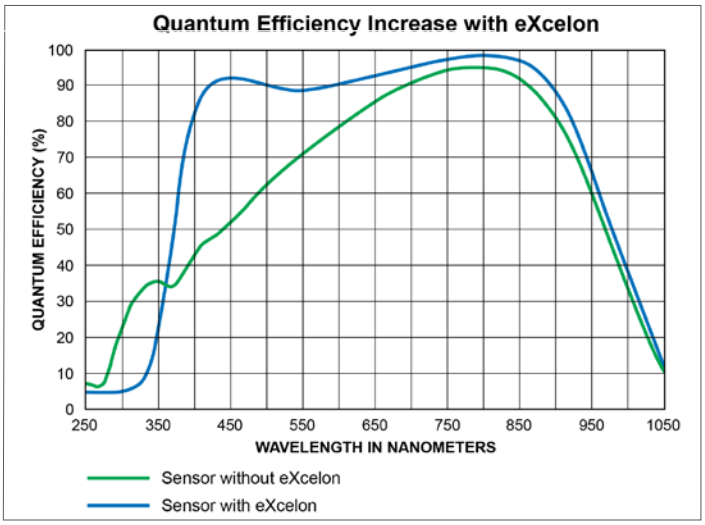

▲ **Optional eXcelon technology is available for LANSIS back-illuminated CCDs**

Unichrome UV-conversion coatings extend detection into the ultraviolet (UV) region of the spectrum. This unique composite phosphor can be vacuum deposited directly to the surface of LANSIS CCD sensors to extend the detection range to 200nm and below.

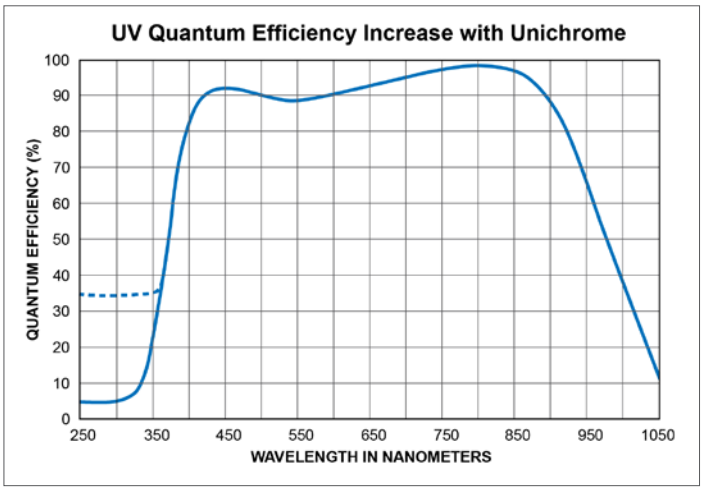

Features and Specifications

CCD Features	
CCD image sensor	» High performance AIMO CCD sensor, Grade 1 » Back-illuminated deep-depletion CCD » Highest average QE from UV to NIR with negligible etaloning
CCD format	2048 x 263 pixels
Imaging area	30.72 x 3.96 mm
Pixel size	15 x 15 µm
Pixel fill factor	100%
Pixel full well capacity	70ke- (typical) low grain
QE	Up to 95% (see curve on page 3)
Dark current	0.02 e-/p/s at -65°C (typical)
Performance Characteristics	
Cooling method	Thermoelectric air-cooled (TEC) or liquid cooling
Cooling (25°C room temperature)	Defaults: Air: -65°C Liquid: -70°C
Thermostatic precision	±0.05°C
ADC speeds/bit	100 kHz/16-bit and 2 MHz/16-bit
Read noise	5e- rms (typical), at 100 kHz, high gain
Vertical shift speed	Selectable: 7.4 µsec/row or 19 µsec/row
Communication	
External trigger modes	» Start on single trigger » Readout per trigger » Exposure during trigger pulse
Trigger specification	Configurable – positive or negative edge
Time stamping	Begin and/or end exposure with 100 ns precision
I/O signals	MCX to BNC; Trigger-In plus two programmable logic outputs (OUT1, OUT2)
Data interface	USB 3.2 Gen 1 (5 Gbps)
TTL requirements	Input – TTL, Output – Push-pull
Physical	
Dimensions	15.1 cm (5.91") L x 12.35 cm (4.86") W x 12.35 cm (4.86") H
Weight	3.05 kg (6.72 lbs)
Camera mount	LANSIS cameras are provided with mounts compatible with OEM requirements
Other	
Certifications	FCC Part 15, Subpart B; Class A, CE, UKCA, RoHS 3, PSE, ISO 9001:2015
Operating Systems	Microsoft® Windows® 10 64-bit, RedHat® Enterprise, Linux® v7 x 64-bit

TELEDYNE ADVANTAGE

Turnkey advantages to systems integrators and OEMs by providing complete PIXEL-TO-PC™ camera/spectrometer design, development and high-volume manufacturing.

With numerous manufacturing facilities and sales/service centers worldwide, we are able to provide technical sales and applications support along with being your local contact for order processing and service. Certified to ISO9001:2105, we maintain a consistency of supply, ensuring that the materials for your product will always be available and on-time.

- **3D CAD, optical ray tracing**
- **High volume manufacturing**
- **Class 10,000 cleanroom, Class 100 flow benches**
- **Certifications: ISO 9001:2015, CE and UKCA, RoHS 3, PSE**

Sensor Design & Fabrication

State-of-the-art, large-scale CCD foundries

Product Design & Production

Optics & Coating Options

Software & Interfaces

Technical Drawings

Weight: 3.05 kg (6.72 lbs)

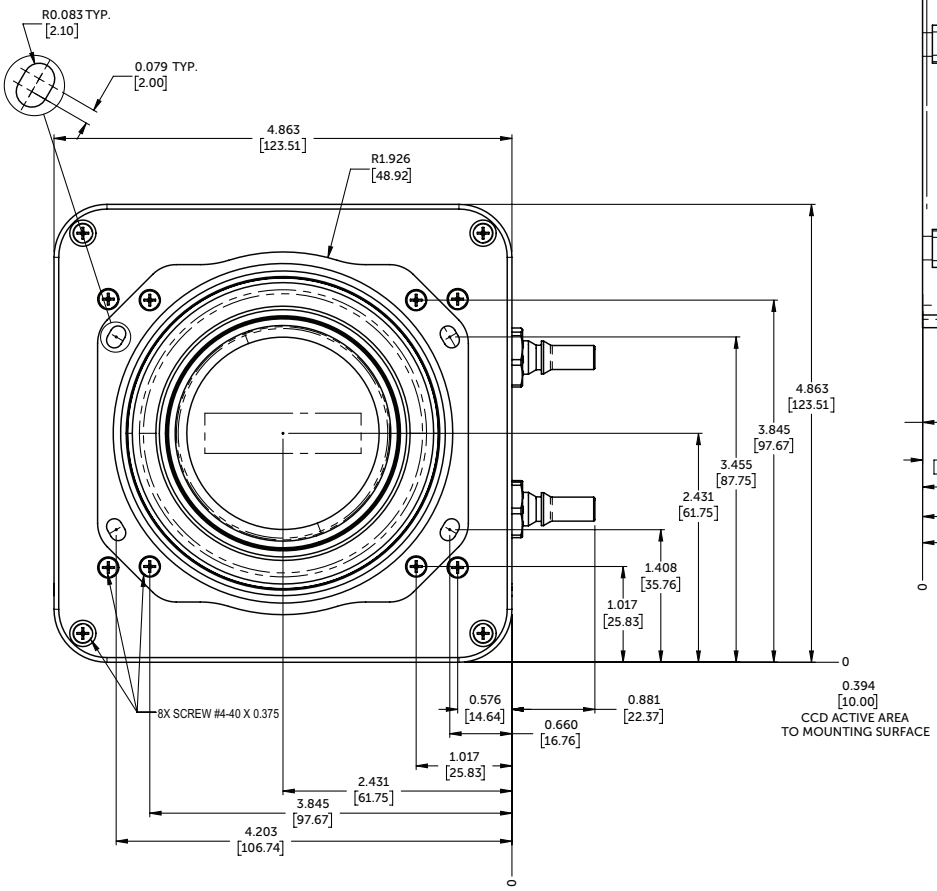

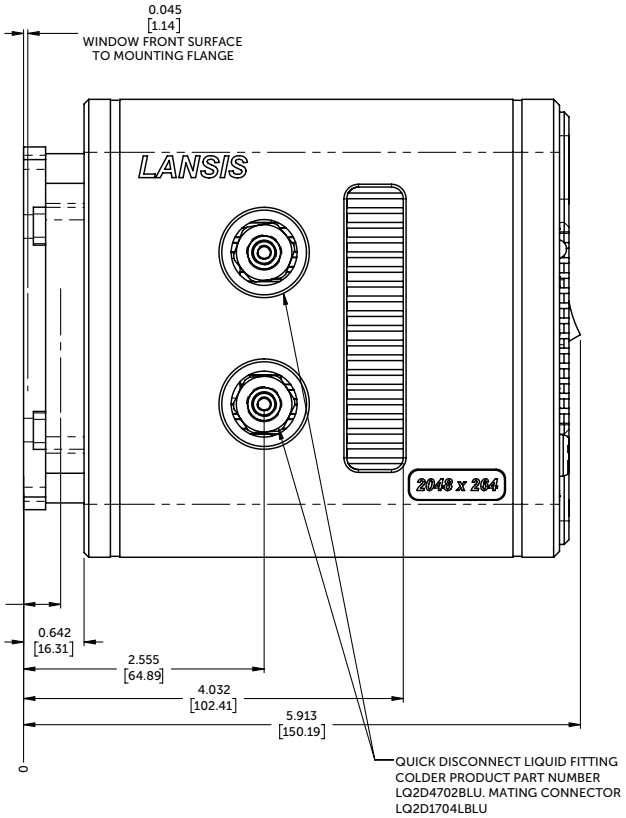

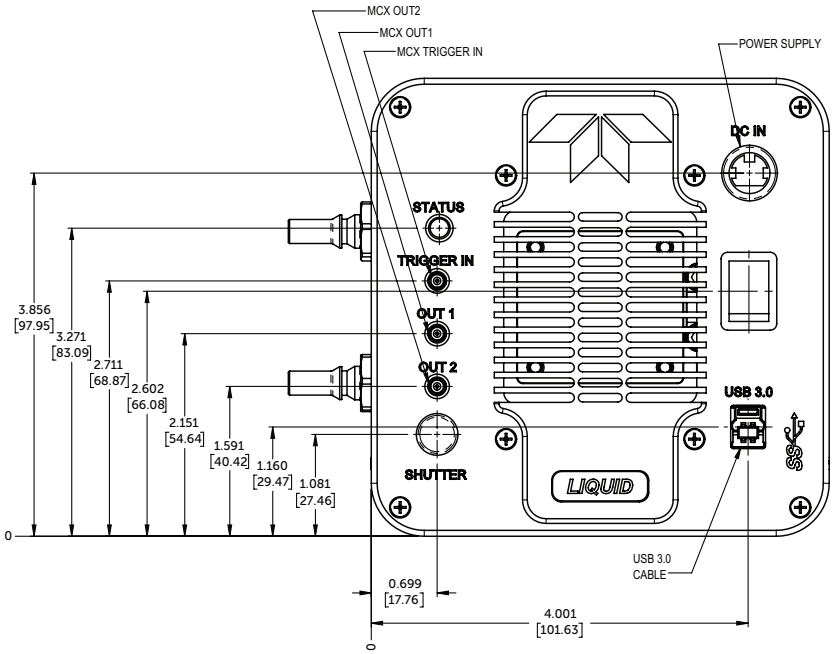

SOFTWARE & ENGINEERING SUPPORT

Data Exchange

Full integration into your system design platform and development environment:

- » True plug-n-play convenience
- » Teledyne's ultimate software development kit, (SDK), provides complete control of camera operations
- » Easy, seamless integration to your system
- » Python, C++, LabVIEW compatibility
- » Full optical, mechanical, and software support
- » PICam™ API drivers automate descriptions of functions, parameters, and valued used to create a user-designed interface for LANSIS cameras and accessories

Engineering

All support documents are available:

- » SolidWorks 3D STEP files
- » Operating Manual
- » Software Manual
- » Software Downloads

Request documents and software/drivers:
pi.info@teledyne.com

LANSIS 261 CCD Cameras

EVERYTHING YOU NEED TO SEAMLESSLY INTEGRATE CAMERAS INTO YOUR SYSTEMS

A wide variety of opto-mechanical interfaces can be provided, insuring precise, trouble-free integration.

LANSIS family of cameras:

LANSIS 261 Spectroscopy Format CCD
30.72 x 3.96 mm sensor, 2048 x 263 pixels, 15 x 15 µm pixel size

LANSIS 207 Spectroscopy Format EMCCD
25.6 x 3.2 mm sensor, 1600 x 200 pixels, 16 x 16 µm pixel size

LANSIS 424 Imaging/Spectroscopy CCD, Back, Deep Depletion
27.6 x 27.6 mm sensor, 2048 x 2048 pixels, 13.5 x 13.5 µm pixel size

LANSIS 471 Imaging/Spectroscopy CCD
13.3 x 13.3 mm sensor, 1024 x 1024 pixels, 13 x 13 µm pixel size

LANSIS 301 Spectroscopy Format CCD, Front-Illuminated*
26.6 x 6.7 mm sensor, 1024 x 256 pixels, 26 x 26 µm pixel size

LANSIS 261HR Spectroscopy Format CCD, Back, Super-Deep-Depletion*
30.72 x 3.96 mm sensor, 2048 x 263 pixels, 15 x 15 µm pixel size

*Future sensor. Contact Teledyne Princeton Instruments for availability.

CONTACTS

Contact your local Teledyne Princeton Instruments representative for additional information.

Teledyne Princeton Instruments – USA
Tel: +1 609-587-9797
pi.info@teledyne.com

Regional Offices

China
pi.info.china@teledyne.com

France
evr@teledyne.com

Germany
pi.germany@teledyne.com

Japan
pi.nippon@teledyne.com

United Kingdom
pi.info@teledyne.com

Listen and subscribe to Teledyne's podcasts

Science Off Camera

"Science off Camera" is hosted by our application specialists with **imaging** and **spectroscopy experts** from a variety of backgrounds including biology, chemistry, and physics.


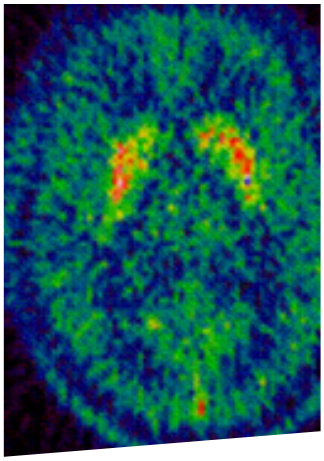
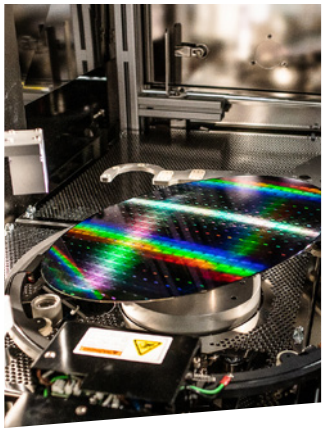
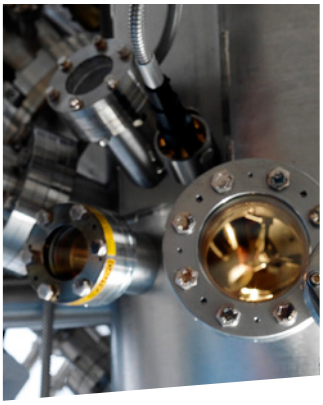


ISO 9001:2015

TELEDYNE

Princeton Instruments
Scientific Imaging

Rev A0-17-01-2022